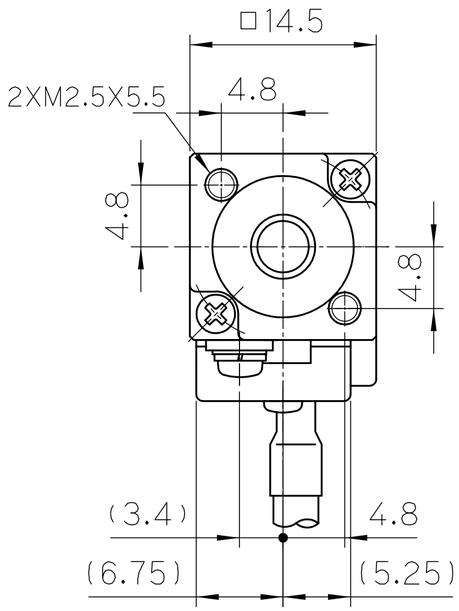
□14.5
2XM2.5X5.5
4.8
4.8
4.8
(3.4)
4.8
(6.75)
(5.25)

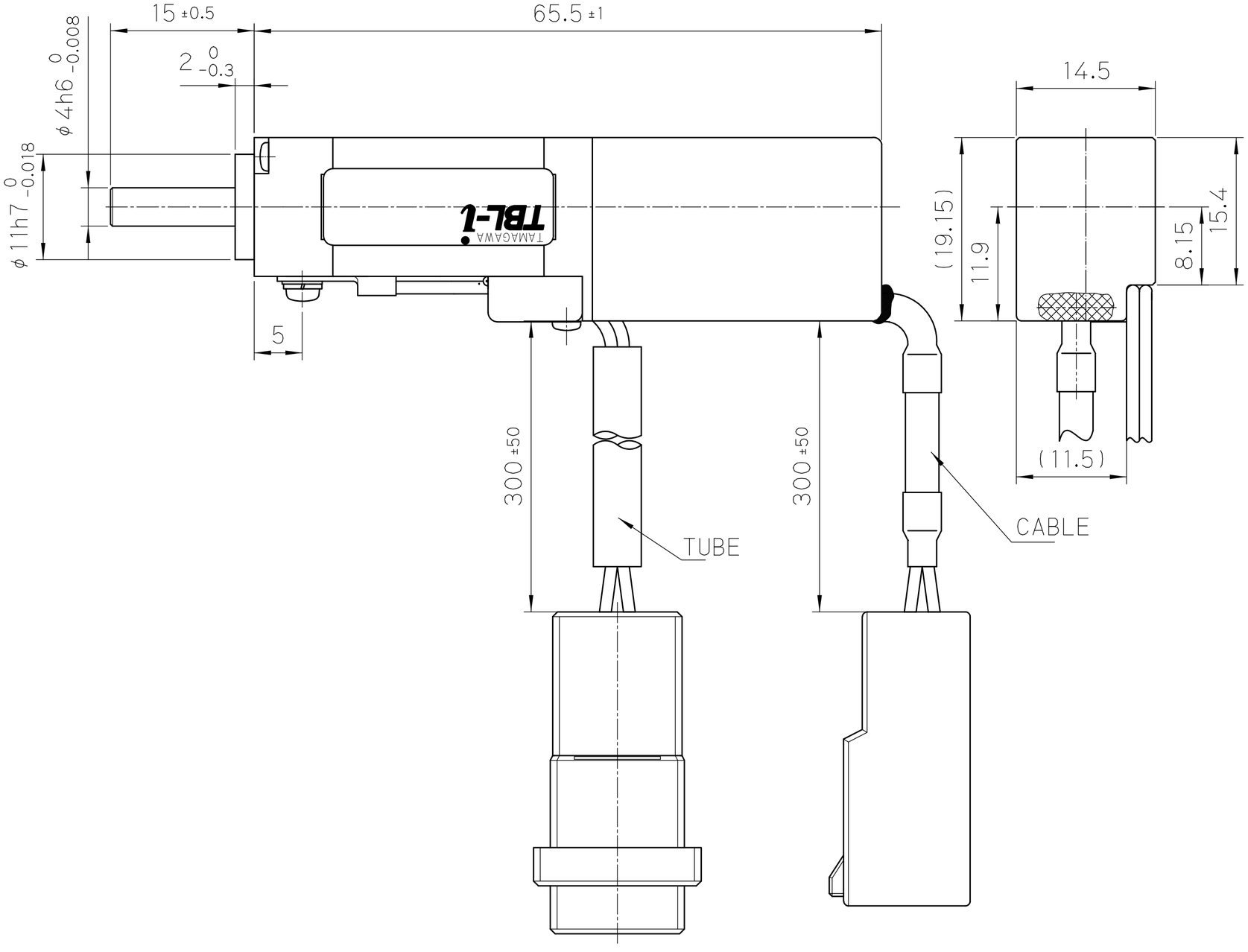
15 ±0.5
65.5 ±1
2 0 -0.3
φ 4h6 0 -0.008
φ 11h7 0 -0.018
TBL-i
TAMAGAWA
5
300 ±50
300 ±50
TUBE
CABLE
14.5
(19.15)
11.9
8.15
15.4
(11.5)